NOTE: THIS IS CONFIDENTIAL PROPERTY OF BMC. IT IS NOT TO BE COPIED OR DUPLICATED IN ANY MANNER AND SHALL NOT BE SUBMITTED TO OUTSIDE PARTIES WITHOUT OUR WRITTEN CONSENT.

REV.	DATE	BY	ECN	REMARKS	CK

PART NO.	'L'	WATTS
12150-1	100.0	5000 WATTS
-2	121.0	8000 WATTS

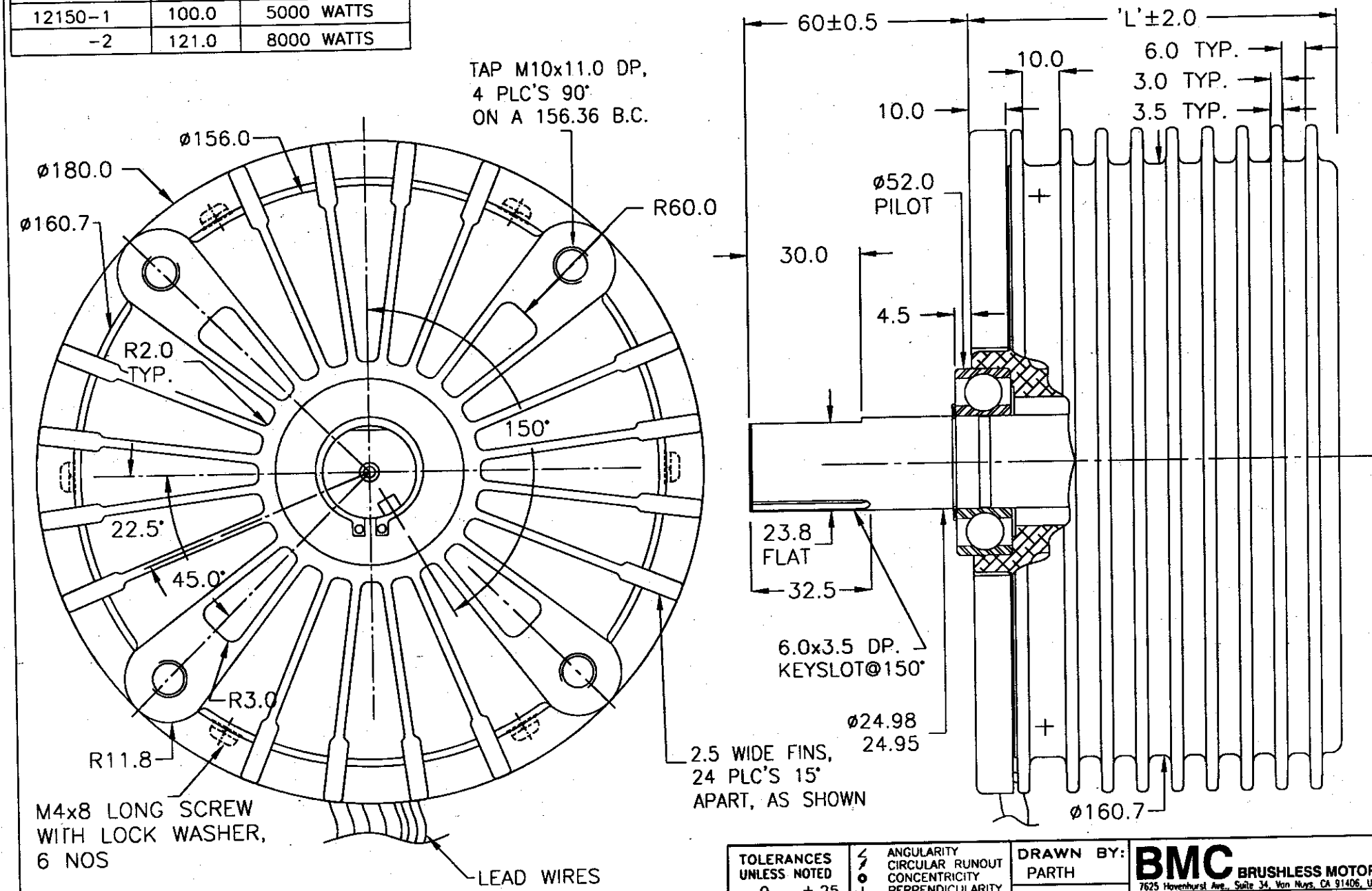

NOTE:
1. CONTROLLER MOUNTED INSIDE THE MOTOR.
2. ALL DIMENSIONS ARE IN MM.

TOLERANCES UNLESS NOTED			
.0	±.25	∠	ANGULARITY
.00	±.13	⌭	CIRCULAR RUNOUT
		◎	CONCENTRICITY
		⊥	PERPENDICULARITY
		(X)	REFERENCE DIM.
		ø	DIAMETER
(X) REF. DIM.			

MATERIAL

DRAWN BY: PARTH

CHECKED BY: SGN

DATE: 03 APRIL 2003

BMC BRUSHLESS MOTOR CO.
7625 Hayenhurst Ave., Suite 34, Van Nuys, CA 91406, USA

MOTOR OUTLINE
58 FR.(AXIAL FLUX)

12150C

REV. –